THIS DRAWING IS UNPUBLISHED. RELEASED FOR PUBLICATION DEC ,2003.
© COPYRIGHT 2003 BY TYCO ELECTRONICS CORPORATION. ALL RIGHTS RESERVED.

LOC	DIST
E	B

REVISIONS

P	LTR	DESCRIPTION	DATE	DWN	APVD
	C	ECR-08-017114	08JUL08	JMS	FWK

NOTES:

1. SINGLE PACK IN ACCORDANCE WITH SPEC 107-3275
2. 30 BULK PACK IN ACCORDANCE WITH SPEC 107-3275
3. 0.08µm GOLD PLATING
4. 0.76µm GOLD PLATING
5. ELECTRICAL CHARACTERISTICS
   FREQUENCY RANGE:
   STAINLESS STEEL: DC-12.4GHz
   BRASS: DC-6GHz
   NOMINAL IMPEDANCE: 50 OHMS
   INSULATION RESISTANCE: 5000 MOHMS
   DIELECTRIC WITHSTAND VOLTAGE: 500V RMS
   CONTACT RESISTANCE:
   CENTRE CONTACT: 3 mOHMS
   OUTER CONTACT: 2 mOHMS
6. MECHANICAL CHARACTERISTICS
   DURABILITY: 500 CYCLES
   TORQUE SETTING 0.15-0.20 NM
7. FOR TECHNICAL DATA REFER TO YOUR LOCAL TYCO ELECTRONICS SALES OFFICE
8. ALL DIMENSIONS ARE NOMINAL FOR REFERENCE ONLY UNLESS OTHERWISE STATED

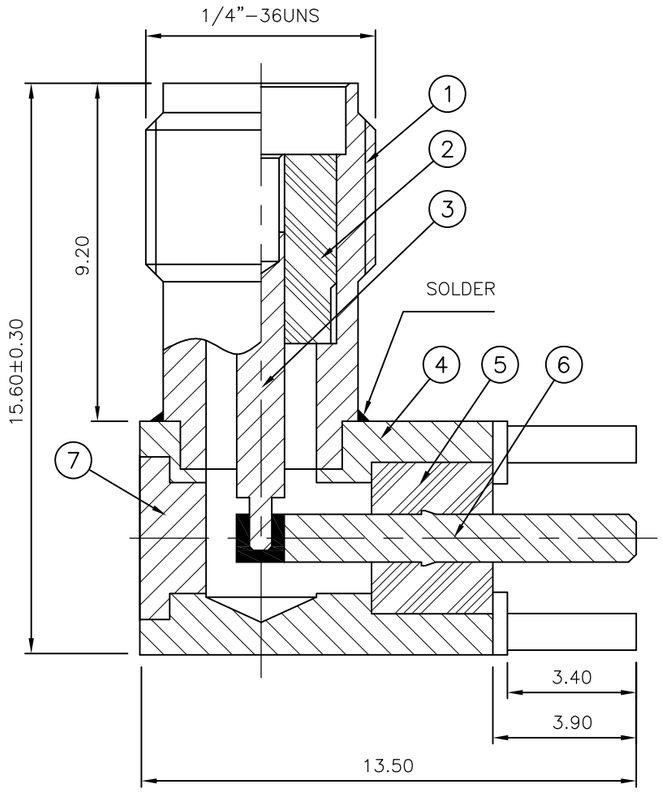

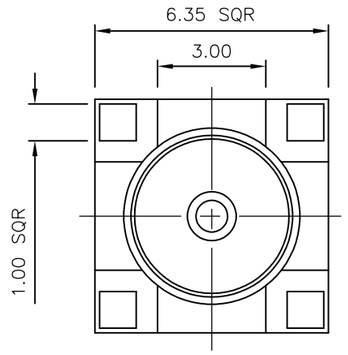

				1	1	–	–	BRASS 3	ACCESS CAP	7
				–	–	1	1	STAINLESS STEEL 3	ACCESS CAP	7
				–	1	1	1	BRASS 4	PIN	6
				1	–	–	–	BRASS 3	PIN	6
				1	–	–	–	DELRIN	INSULATOR	5
				–	1	1	1	PTFE	INSULATOR	5
				1	1	–	–	BRASS 3	BODY	4
				–	–	1	1	STAINLESS STEEL 3	BODY	4
				–	1	1	1	BERYLLIUM COPPER 4	SOCKET	3
				1	–	–	–	PHOSPHER BRONZE 3	SOCKET	3
				1	–	–	–	DELRIN	INSULATOR	2
				–	1	1	1	PTFE	INSULATOR	2
				1	1	–	–	BRASS 3	BODY	1
				–	–	1	1	STAINLESS STEEL 3	BODY	1
				3--1	3--0	1--1	1--0	MATERIAL	DESCRIPTION	ITEM
				2	1	2	1			
QUANTITY PER ASSY								PARTS LIST		

RECOMMENDED PCB LAYOUT

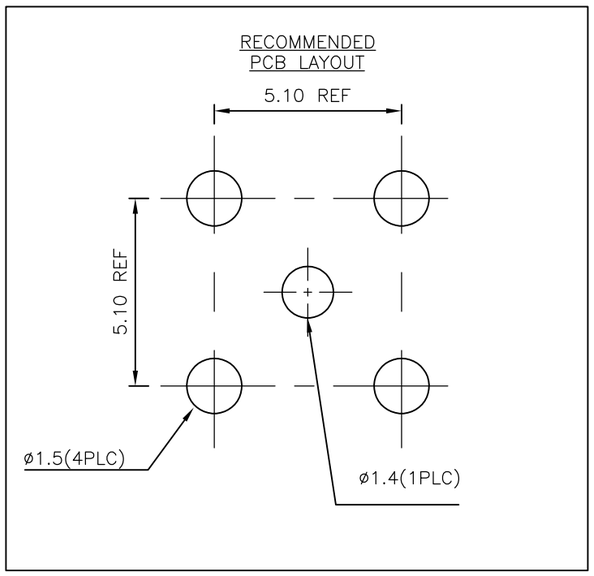

THIS DRAWING IS A CONTROLLED DOCUMENT.

DIMENSIONS: mm

TOLERANCES UNLESS OTHERWISE SPECIFIED:
0 PLC ± –
1 PLC ± –
2 PLC ± –
3 PLC ± –
4 PLC ± –
ANGLES ± –

MATERIAL: SEE TABLE

FINISH: –

DWN	J.SANDWELL	09DEC03
CHK	S.PARLOW	09DEC03
APVD	F.WHEELER-KING	09DEC03
PRODUCT SPEC	—	
APPLICATION SPEC	—	
WEIGHT	—	

CUSTOMER DRAWING

Tyco Electronics

Tyco Electronics Corporation
Bideford, UK, EX39 4HE

NAME: SMA RIGHT ANGLE PCB SOCKET RECEPTACLE
–
–

SIZE	CAGE CODE	DRAWING NO	RESTRICTED TO
A3	00779	C-1478978	—

SCALE	SHEET	REV
NTS	1 OF 1	C